Winstar Display Co., LTD
華凌光電股份有限公司

住址: 407 台中市中清路 163 號
No.163 Chung Ching RD.,
Taichune, Taiwan, R.O.C

WEB: http://www.winstar.com.tw
E-mail: winstar@winstar.com.tw
Tel:886-4-24262208 Fax：886-4-24262207

SPECIFICATION

CUSTOMER : _____

MODULE NO.: WG12864A-TMI-V#N

APPROVED BY: **(FOR CUSTOMER USE ONLY)**	**PCB VERSION: DATA:**

SALES BY	APPROVED BY	CHECKED BY	PREPARED BY
ISSUED DATE:			

Winstar Display Co., LTD
華凌光電股份有限公司

MODLE NO：

DOC. FIRST ISSUE

RECORDS OF REVISION

VERSION	DATE	REVISED PAGE NO.	**SUMMARY**
0	2006-10-11		First issue

Contents

1.Module Classification Information

2.Precautions in use of LCD Modules

3.General Specification

4.Absolute Maximum Ratings

5.Electrical Characteristics

6.Optical Characteristics

7.Interface Description

8.Contour Drawing & Block Diagram

9. Timing Characteristics

10.Display Control Instruction

11.Detailed Explanation

12.Reliability

13.Backlight Information

14. Inspection specification

15. Material List of Components for RoHs

1.Module Classification Information

W G 1 2 8 6 4 A－T M I－ V#N
① ② ③ ④ ⑤ ⑥ ⑦ ⑧

① Brand：WINSTAR DISPLAY CORPORATION
② Display Type：H→Character Type, G→Graphic Type
③ Display Font：128 x 64 dots
④ Model serials no.
⑤ Backlight Type：
N→Without backlight
B→EL, Blue green
D→EL, Green
W→EL, White
F→CCFL, White
Y→LED, Yellow Green
T→LED, White
A→LED, Amber
R→LED, Red
O→LED, Orange
G→LED, Green
⑥ LCD Mode：
B→TN Positive, Gray
N→TN Negative,
G→STN Positive, Gray
Y→STN Positive, Yellow Green
M→STN Negative, Blue
F→FSTN Positive
T→FSTN Negative
⑦ LCD Polarize Type/ Temperature range/ View direction
A→Reflective, N.T, 6:00
D→Reflective, N.T, 12:00
G→Reflective, W. T, 6:00
J→Reflective, W. T, 12:00
B→Transflective, N.T,6:00
E→Transflective, N.T.12:00
H→Transflective, W.T,6:00
K→Transflective, W.T,12:00
C→Transmissive, N.T,6:00
F→Transmissive, N.T,12:00
I→Transmissive, W. T, 6:00
L→Transmissive, W.T,12:00
⑧ Special Code
V : Build in Negative Voltage ;
N : IC NT7107,NT7108;
#:Fit in with the ROHS Directions and regulations

2.Precautions in use of LCD Modules

(1)Avoid applying excessive shocks to the module or making any alterations or modifications to it.
(2)Don’t make extra holes on the printed circuit board, modify its shape or change the components of LCD module.
(3)Don’t disassemble the LCM.
(4)Don’t operate it above the absolute maximum rating.
(5)Don’t drop, bend or twist LCM.
(6)Soldering: only to the I/O terminals.
(7)Storage: please storage in anti-static electricity container and clean environment.

3.General Specification

Item	Dimension	Unit
Number of Characters	128 x 64 dots	—
Module dimension	93 x 70.0 x 13.6(MAX)	mm
View area	72.0 x 40.0	mm
Active area	66.52 x 33.24	mm
Dot size	0.48 x 0.48	mm
Dot pitch	0.52 x 0.52	mm
LCD type	STN, Negative, Transmissive ,Blue	
Duty	1/64	
View direction	6 o’clock	
Backlight Type	LED White	

4.Absolute Maximum Ratings

Item	Symbol	Min	Typ	Max	Unit
Operating Temperature	T_{OP}	-20	—	+70	℃
Storage Temperature	T_{ST}	-30	—	+80	℃
Input Voltage	V_I	0	—	V_{DD}	V
Supply Voltage For Logic	V_{DD}	0	—	6.7	V
Supply Voltage For LCD	V_{DD}-V_{SS}	0	—	16.7	V
Supply Voltage For LCD	V_{DD}-V_{OUT}	—	—	-10	V

5.Electrical Characteristics

Item	Symbol	Condition	Min	Typ	Max	Unit
Supply Voltage For Logic	V_{DD}-V_{SS}	—	4.5	5.0	5.5	V
Supply Voltage For LCD	V_{DD}-V_0	Ta=-20℃	—	—	10.6	V
		Ta=25℃	—	9.1	—	V
		Ta=+70℃	7.6	—	—	V
Input High Volt.	V_{IH}	—	2.0	—	V_{DD}	V
Input Low Volt.	V_{IL}	—	0	—	0.8	V
Output High Volt.	V_{OH}	—	2.4	—	V_{DD}	V
Output Low Volt.	V_{OL}	—	—	—	0.4	V
Supply Current	I_{DD}	—	—	18	—	mA

6.Optical Characteristics

Item	Symbol	Condition	Min	Typ	Max	Unit
View Angle	(V) θ	CR≧2	20	—	40	deg
	(H) φ	CR≧2	-30	—	30	deg
Contrast Ratio	CR	—	—	3	—	—
Response Time	T rise	—	—	200	300	ms
	T fall	—	—	200	300	ms

Definition of Operation Voltage (Vop)

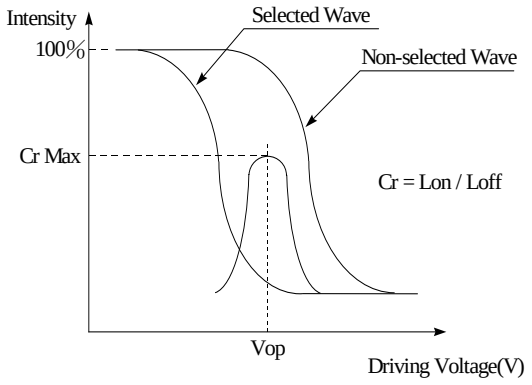

[positive type]

Definition of Response Time (Tr , Tf)

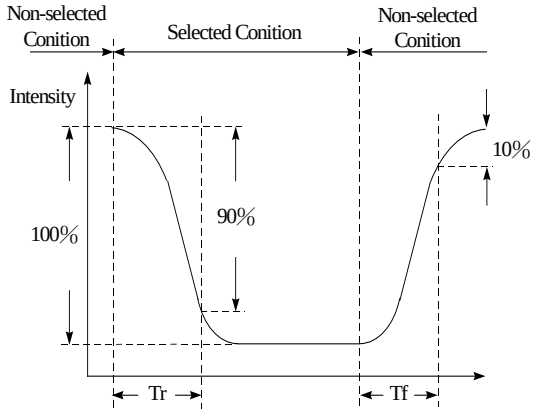

[positive type]

Conditions :

Operating Voltage : Vop　　Viewing Angle(θ ， φ) : 0°， 0°

Frame Frequency : 64 HZ　　Driving Waveform : 1/N duty , 1/a bias

Definition of viewing angle(CR≧2)

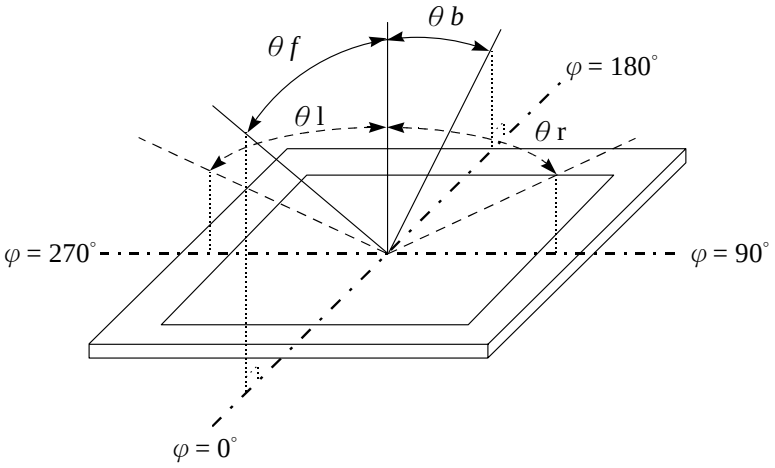

7.Interface Description

Pin No.	Symbol	Level	Description
1	V_{SS}	0V	Ground
2	V_{DD}	5.0V	Supply voltage for logic
3	V_O	(Variable)	Operating voltage for LCD
4	D/I	H/L	H: Data , L : Instruction
5	R/W	H/L	H: Read (MPU←Module) , L: Write (MPU→Module)
6	E	H	Enable signal
7	DB0	H/L	Data bus line
8	DB1	H/L	Data bus line
9	DB2	H/L	Data bus line
10	DB3	H/L	Data bus line
11	DB4	H/L	Data bus line
12	DB5	H/L	Data bus line
13	DB6	H/L	Data bus line
14	DB7	H/L	Data bus line
15	CS1	H	Select Column 1~ Column 64
16	CS2	H	Select Column 65~ Column 128
17	RST	L	Reset signal
18	Vee	—	NC
19	A	—	Power Supply for LED backlight (+)
20	K	—	Power Supply for LED backlight (-)

8.Contour Drawing &Block Diagram

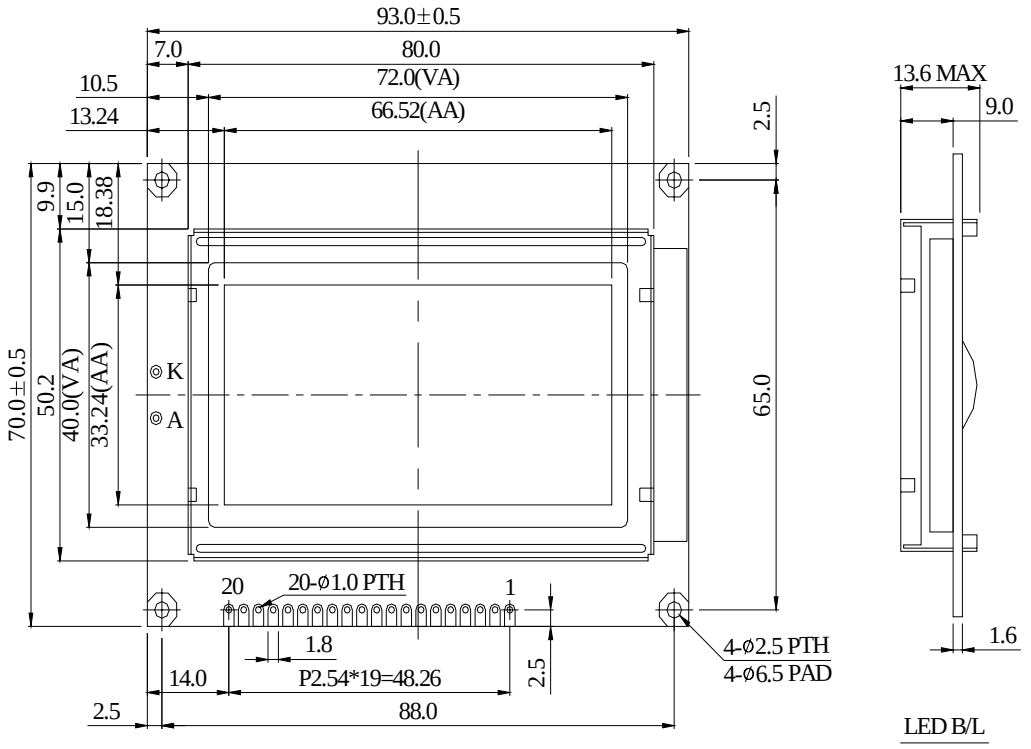

PIN NO.	SYMBOL
1	Vss
2	Vdd
3	Vo
4	D/I
5	R/$\overline{W}$
6	E
7	DB0
8	DB1
9	DB2
10	DB3
11	DB4
12	DB5
13	DB6
14	DB7
15	CS1
16	CS2
17	$\overline{RES}$
18	Vout
19	A
20	K

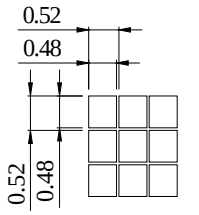

DOT SIZE
SCALE 10/1

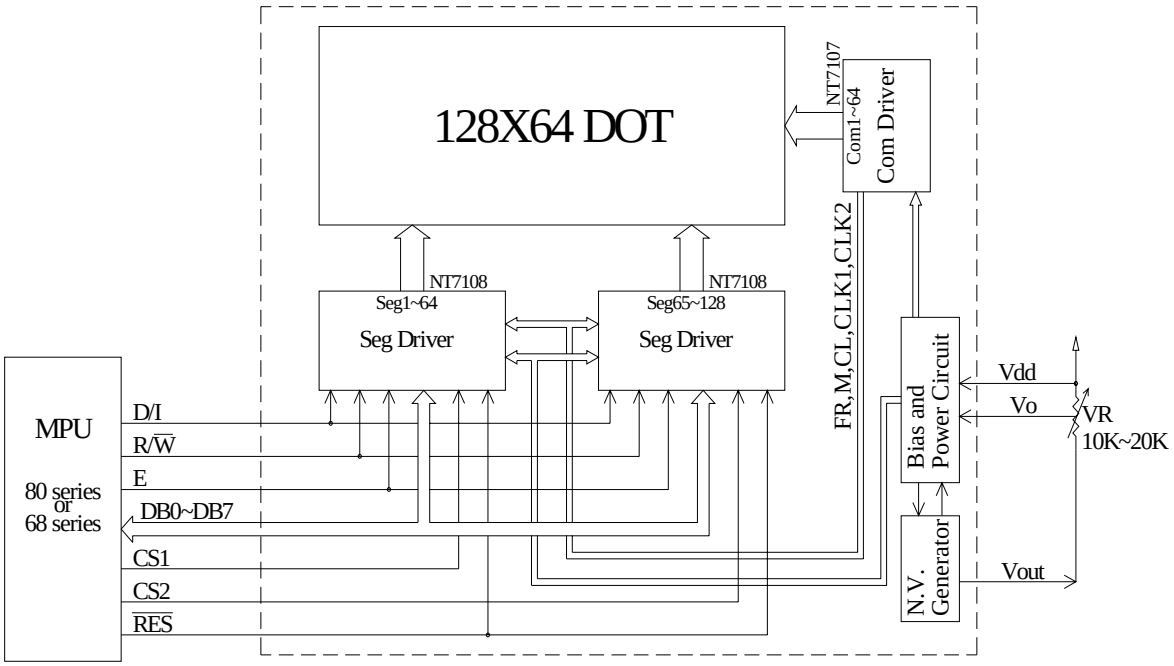

External contrast adjustment.

9.Timing Characteristics

MPU Interface (T=25℃, VDD=+5.0V±0.5)

Characteristic	Symbol	Min	Typ	Max	Unit
E cycle	tcyc	1000	—	—	ns
E high level width	twhE	450	—	—	ns
E low level width	twlE	450	—	—	ns
E rise time	tr	—	—	25	ns
E tall time	tf	—	—	25	ns
Address set-up time	tas	140	—	—	ns
Address hold time	tah	10	—	—	ns
Data set-up time	tdsw	200	—	—	ns
Data delay time	tddr	—	—	320	ns
Data hold time (write)	tdhw	10	—	—	ns
Data hold time (read)	tdhr	20	—	—	ns

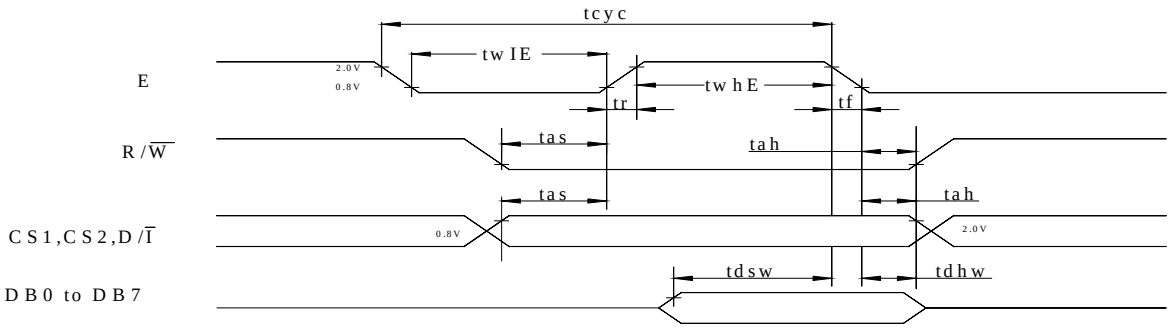

MPU Write Timing

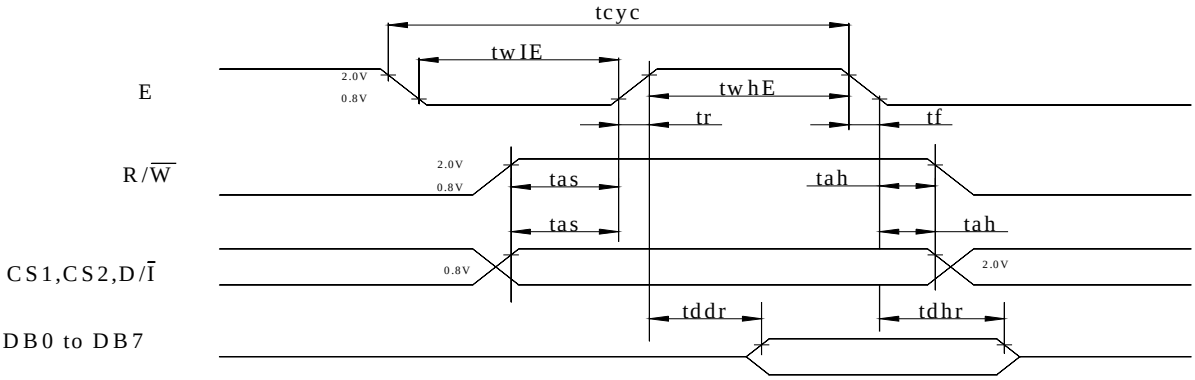

MPU Read Timing

10.Display Control Instruction

The display control instructions control the internal state of the NT7108. Instruction is received from MPU to NT7108 for the display control. The following table shows various instructions.

Instruction	RS	R/W	DB7	DB6	DB5	DB4	DB3	DB2	DB1	DB0	Function
Display on/off	L	L	L	L	H	H	H	H	H	L/H	Controls the display on or off. Internal status and display RAM data is not affected. L:OFF, H:ON
Set address (Y address)	L	L	L	H	Y address (0-63)						Sets the Y address in the Y address counter.
Set page (X address)	L	L	H	L	H	H	H	Page (0-7)			Sets the X address at the X address register.
Display Start line (Z address)	L	L	H	H	Display start line (0-63)						Indicates the display data RAM displayed at the top of the screen.
Status read	L	H	Busy	L	On/ Off	Reset	L	L	L	L	Read status. BUSY L: Ready H: In operation ON/OFF L: Display ON H: Display OFF RESET L: Normal H: Reset
Write display data	H	L	Write data								Writes data (DB0: 7) into display data RAM. After writing instruction, Y address is increased by 1 automatically.
Read display data	H	H	Read data								Reads data (DB0: 7) from display data RAM to the data bus.

11.Detailed Explanation

RS	R/W	DB7	DB6	DB5	DB4	DB3	DB2	DB1	DB0
0	0	0	0	1	1	1	1	1	D

The display data appears when D is 1 and disappears when D is 0. Though the data is not on the

screen with D=0, it remains in the display data RAM. Therefore, you can make it appear by changing D=0 into D=1.

SET ADDRESS (Y ADDRESS)

RS	R/W	DB7	DB6	DB5	DB4	DB3	DB2	DB1	DB0
0	0	0	1	AC5	AC4	AC3	AC2	AC1	AC0

Y address (AC0-AC5) of the display data RAM is set in the Y address counter. An address is set by instruction and increased by 1 automatically by read or write operations of display data.

SET PAGE (X ADDRESS)

RS	R/W	DB7	DB6	DB5	DB4	DB3	DB2	DB1	DB0
0	0	1	0	1	1	1	AC2	AC1	AC0

X address (AC0-AC2) of the display data RAM is set in the X address register. Writing or reading to or from MPU is executed in this specified page until the next page is set.

DISPLAY START LINE (Z ADDRESS)

RS	R/W	DB7	DB6	DB5	DB4	DB3	DB2	DB1	DB0
0	0	1	1	AC5	AC4	AC3	AC2	AC1	AC0

Z address (AC0-AC5) of the display data RAM is set in the display start line register and displayed at the top of the screen. When the display duty cycle is 1/64 or others (1/32-1/64), the data of total line number of LCD screen, from the line specified by display start line instruction, is displayed.

STATUS READ

RS	R/W	DB7	DB6	DB5	DB4	DB3	DB2	DB1	DB0
0	1	BUSY	0	ON/OFF	RESET	0	0	0	0

・BUSY

When BUSY is 1, the Chip is executing internal operation and no instructions are accepted.

When BUSY is 0, the Chip is ready to accept any instructions.

・ON/OFF

When ON/OFF is 1, the display is OFF.

When ON/OFF is 0, the display is ON.

・RESET

When RESET is 1, the system is being initialized.

In this condition, no instructions except status read can be accepted.

When RESET is 0, initializing has finished and the system is in usual operation condition.

WRITE DISPLAY DATA

RS	R/W	DB7	DB6	DB5	DB4	DB3	DB2	DB1	DB0
1	0	D7	D6	D5	D4	D3	D2	D1	D0

Writes data (D0-D7) into the display data RAM. After writing instruction, Y address is increased by 1automatically.

READ DISPLAY DATA

RS	R/W	DB7	DB6	DB5	DB4	DB3	DB2	DB1	DB0
1	1	D7	D6	D5	D4	D3	D2	D1	D0

Reads data (D0-D7) from the display data RAM. After reading instruction, Y address is increased by 1 automatically.

12.Reliability

Content of Reliability Test (wide temperature, -20℃~70℃)

Environmental Test			
Test Item	**Content of Test**	**Test Condition**	**Note**
High Temperature storage	Endurance test applying the high storage temperature for a long time.	80℃ 200hrs	2
Low Temperature storage	Endurance test applying the high storage temperature for a long time.	-30℃ 200hrs	1,2
High Temperature Operation	Endurance test applying the electric stress (Voltage & Current) and the thermal stress to the element for a long time.	70℃ 200hrs	——
Low Temperature Operation	Endurance test applying the electric stress under low temperature for a long time.	-20℃ 200hrs	1
High Temperature/ Humidity Operation	The module should be allowed to stand at 60 ℃,90%RH max For 96hrs under no-load condition excluding the polarizer, Then taking it out and drying it at normal temperature.	60℃,90%RH 96hrs	1,2
Thermal shock resistance	The sample should be allowed stand the following 10 cycles of operation -20℃ 25℃ 70℃ 30min 5min 30min 1 cycle	-20℃/70℃ 10 cycles	——
Vibration test	Endurance test applying the vibration during transportation and using.	Total fixed amplitude : 1.5mm Vibration Frequency : 10~55Hz One cycle 60 seconds to 3 directions of X,Y,Z for Each 15 minutes	3
Static electricity test	Endurance test applying the electric stress to the terminal.	VS=800V,RS=1.5kΩ CS=100pF 1 time	——

Note1: No dew condensation to be observed.

Note2: The function test shall be conducted after 4 hours storage at the normal Temperature and humidity after remove from the test chamber.

Note3: Vibration test will be conducted to the product itself without putting it in a container.

13.Backlight Information

Specification

PARAMETER	SYMBOL	MIN	TYP	MAX	UNIT	TEST CONDITION
Supply Current	ILED	65	80	100	mA	V=3.5V
Supply Voltage	V	3.4	3.5	3.6	V	—
Reverse Voltage	VR	—	—	5	V	—
Luminous Intensity	IV	200	250	—	cd/m^2	ILED=80mA
Life Time	—	—	50K	—	Hr.	ILED≦80mA
Color	White					

Note: The LED of B/L is drive by current only, drive voltage is for reference only. drive voltage can make driving current under safety area (current between minimum and maximum).

.Drive from pin19,pin20

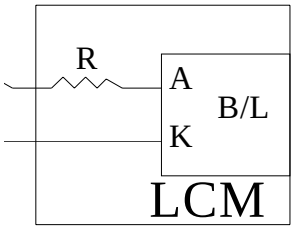

14. Inspection specification

<table>
<tr><th>NO</th><th>Item</th><th>Criterion</th><th>AQL</th></tr>
<tr><td>01</td><td>Electrical Testing</td><td>1.1 Missing vertical, horizontal segment, segment contrast defect.
1.2 Missing character , dot or icon.
1.3 Display malfunction.
1.4 No function or no display.
1.5 Current consumption exceeds product specifications.
1.6 LCD viewing angle defect.
1.7 Mixed product types.
1.8 Contrast defect.</td><td>0.65</td></tr>
<tr><td>02</td><td>Black or white spots on LCD (display only)</td><td>2.1 White and black spots on display ≦0.25mm, no more than three white or black spots present.
2.2 Densely spaced: No more than two spots or lines within 3mm</td><td>2.5</td></tr>
<tr><td rowspan="2">03</td><td rowspan="2">LCD black spots, white spots, contamination (non-display)</td><td>3.1 Round type : As following drawing
Φ=(x + y) / 2
 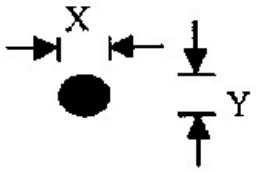

<table>
<tr><th>SIZE</th><th>Acceptable Q TY</th></tr>
<tr><td>Φ ≦0.10</td><td>Accept no dense</td></tr>
<tr><td>0.10＜Φ ≦0.20</td><td>2</td></tr>
<tr><td>0.20＜Φ ≦0.25</td><td>1</td></tr>
<tr><td>0.25＜Φ</td><td>0</td></tr>
</table></td><td>2.5</td></tr>
<tr><td>3.2 Line type : (As following drawing)
 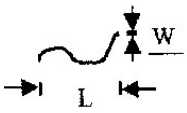

<table>
<tr><th>Length</th><th>Width</th><th>Acceptable Q TY</th></tr>
<tr><td>---</td><td>W≦0.02</td><td>Accept no dense</td></tr>
<tr><td>L≦3.0</td><td>0.02＜W≦0.03</td><td rowspan="2">2</td></tr>
<tr><td>L≦2.5</td><td>0.03＜W≦0.05</td></tr>
<tr><td>---</td><td>0.05＜W</td><td>As round type</td></tr>
</table></td><td>2.5</td></tr>
<tr><td>04</td><td>Polarizer bubbles</td><td>If bubbles are visible, judge using black spot specifications, not easy to find, must check in specify direction.
<table>
<tr><th>Size Φ</th><th>Acceptable Q TY</th></tr>
<tr><td>Φ ≦0.20</td><td>Accept no dense</td></tr>
<tr><td>0.20＜Φ ≦0.50</td><td>3</td></tr>
<tr><td>0.50＜Φ ≦1.00</td><td>2</td></tr>
<tr><td>1.00＜Φ</td><td>0</td></tr>
<tr><td>Total Q TY</td><td>3</td></tr>
</table></td><td>2.5</td></tr>
</table>

<table>
<tr><th>NO</th><th>Item</th><th>Criterion</th><th>AQL</th></tr>
<tr><td>05</td><td>Scratches</td><td>Follow NO.3 LCD black spots, white spots, contamination</td><td></td></tr>
<tr><td>06</td><td>Chipped glass</td><td>
Symbols Define:
x: Chip length y: Chip width z: Chip thickness
k: Seal width t: Glass thickness a: LCD side length
L: Electrode pad length:

6.1 General glass chip :
6.1.1 Chip on panel surface and crack between panels:
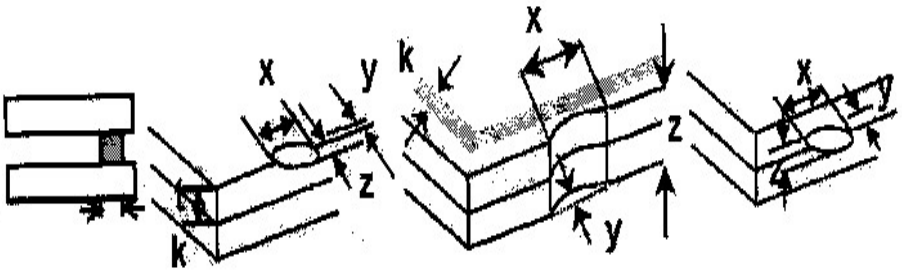

<table>
<tr><td>z: Chip thickness</td><td>y: Chip width</td><td>x: Chip length</td></tr>
<tr><td>Z≦1/2t</td><td>Not over viewing area</td><td>x≦1/8a</td></tr>
<tr><td>1/2t＜z≦2t</td><td>Not exceed 1/3k</td><td>x≦1/8a</td></tr>
</table>
⊙If there are 2 or more chips, x is total length of each chip.

6.1.2 Corner crack:
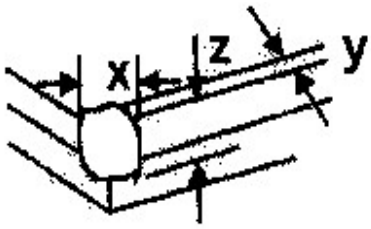

<table>
<tr><td>z: Chip thickness</td><td>y: Chip width</td><td>x: Chip length</td></tr>
<tr><td>Z≦1/2t</td><td>Not over viewing area</td><td>x≦1/8a</td></tr>
<tr><td>1/2t＜z≦2t</td><td>Not exceed 1/3k</td><td>x≦1/8a</td></tr>
</table>
⊙If there are 2 or more chips, x is the total length of each chip.
</td><td>2.5</td></tr>
</table>

<table>
<tr><th>NO</th><th>Item</th><th>Criterion</th><th>AQL</th></tr>
<tr><td>06</td><td>Glass crack</td><td>
Symbols :
x: Chip length y: Chip width z: Chip thickness
k: Seal width t: Glass thickness a: LCD side length
L: Electrode pad length
6.2 Protrusion over terminal :
6.2.1 Chip on electrode pad :
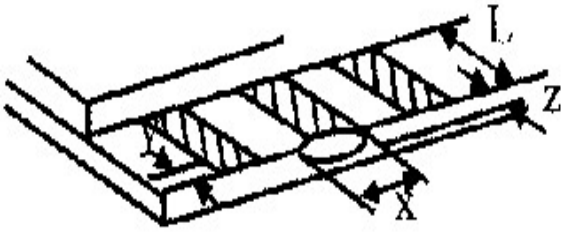

<table>
<tr><td>y: Chip width</td><td>x: Chip length</td><td>z: Chip thickness</td></tr>
<tr><td>y≦0.5mm</td><td>x≦1/8a</td><td>0 ＜ z ≦ t</td></tr>
</table>
6.2.2 Non-conductive portion:
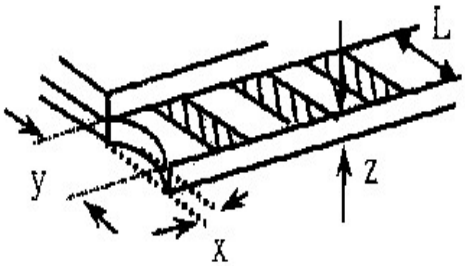

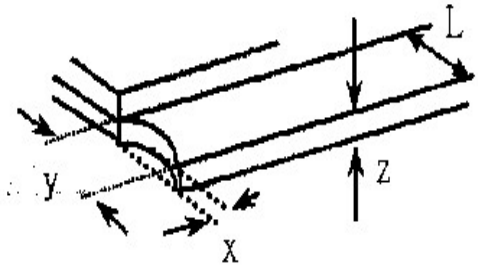

<table>
<tr><td>y: Chip width</td><td>x: Chip length</td><td>z: Chip thickness</td></tr>
<tr><td>y≦ L</td><td>x≦1/8a</td><td>0 ＜ z ≦ t</td></tr>
</table>
⊙If the chipped area touches the ITO terminal, over 2/3 of the ITO must remain and be inspected according to electrode terminal specifications.
⊙If the product will be heat sealed by the customer, the alignment mark not be damaged.
6.2.3 Substrate protuberance and internal crack.
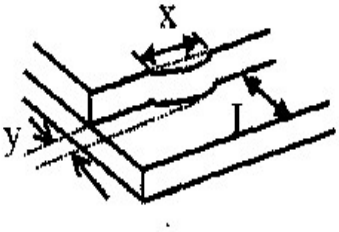

<table>
<tr><td>y: width</td><td>x: length</td></tr>
<tr><td>y≦1/3L</td><td>x ≦ a</td></tr>
</table>
</td><td>2.5</td></tr>
</table>

NO	Item	Criterion	AQL
07	Cracked glass	The LCD with extensive crack is not acceptable.	2.5
08	Backlight elements	8.1 Illumination source flickers when lit. 8.2 Spots or scratched that appear when lit must be judged. Using LCD spot, lines and contamination standards. 8.3 Backlight doesn’ t light or color wrong.	0.65 2.5 0.65
09	Bezel	9.1 Bezel may not have rust, be deformed or have fingerprints, stains or other contamination. 9.2 Bezel must comply with job specifications.	2.5 0.65
10	PCB、COB	10.1 COB seal may not have pinholes larger than 0.2mm or contamination. 10.2 COB seal surface may not have pinholes through to the IC. 10.3 The height of the COB should not exceed the height indicated in the assembly diagram. 10.4 There may not be more than 2mm of sealant outside the seal area on the PCB. And there should be no more than three places. 10.5 No oxidation or contamination PCB terminals. 10.6 Parts on PCB must be the same as on the production characteristic chart. There should be no wrong parts, missing parts or excess parts. 10.7 The jumper on the PCB should conform to the product characteristic chart. 10.8 If solder gets on bezel tab pads, LED pad, zebra pad or screw hold pad, make sure it is smoothed down. 10.9 The Scraping testing standard for Copper Coating of PCB 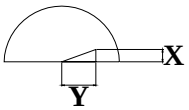 **X * Y<=2mm^2**	2.5 2.5 0.65 2.5 2.5 0.65 0.65 2.5 2.5
11	Soldering	11.1 No un-melted solder paste may be present on the PCB. 11.2 No cold solder joints, missing solder connections, oxidation or icicle. 11.3 No residue or solder balls on PCB. 11.4 No short circuits in components on PCB.	2.5 2.5 2.5 0.65

NO	Item	Criterion	AQL
12	General appearance	12.1 No oxidation, contamination, curves or, bends on interface Pin (OLB) of TCP. 12.2 No cracks on interface pin (OLB) of TCP. 12.3 No contamination, solder residue or solder balls on product. 12.4 The IC on the TCP may not be damaged, circuits. 12.5 The uppermost edge of the protective strip on the interface pin must be present or look as if it cause the interface pin to sever. 12.6 The residual rosin or tin oil of soldering (component or chip component) is not burned into brown or black color. 12.7 Sealant on top of the ITO circuit has not hardened. 12.8 Pin type must match type in specification sheet. 12.9 LCD pin loose or missing pins. 12.10 Product packaging must the same as specified on packaging specification sheet. 12.11 Product dimension and structure must conform to product specification sheet.	2.5 0.65 2.5 2.5 2.5 2.5 2.5 0.65 0.65 0.65 0.65

15. Material List of Components for RoHs

1. WINSTAR Display Co., Ltd hereby declares that all of or part of products (with the mark "#"in code), including, but not limited to, the LCM, accessories or packages, manufactured and/or delivered to your company (including your subsidiaries and affiliated company) directly or indirectly by our company (including our subsidiaries or affiliated companies) do not intentionally contain any of the substances listed in all applicable EU directives and regulations, including the following substances.

   Exhibit A：The Harmful Material List

Material	(Cd)	(Pb)	(Hg)	(Cr6+)	PBBs	PBDEs
Limited Value	100 ppm	1000 ppm	1000 ppm	1000 ppm	1000 ppm	1000 ppm
Above limited value is set up according to RoHS.						

2.Process for RoHS requirement：

(1) Use the Sn/Ag/Cu soldering surface；the surface of Pb-free solder is rougher than we used before.

(2) Heat-resistance temp.：

Reflow：250℃,30 seconds Max.；

Connector soldering wave or hand soldering：320℃, 10 seconds max.

(3) Temp. curve of reflow, max. Temp.：235±5℃；

Recommended customer's soldering temp. of connector：280℃, 3 seconds.

winstar **LCM Sample Estimate Feedback Sheet**

Module Number：_____ **Page: 1**

1、Panel Specification：

1. Panel Type： ☐ Pass ☐ NG ,_____
2. View Direction： ☐ Pass ☐ NG ,_____
3. Numbers of Dots： ☐ Pass ☐ NG ,_____
4. View Area： ☐ Pass ☐ NG ,_____
5. Active Area： ☐ Pass ☐ NG ,_____
6. Operating Temperature： ☐ Pass ☐ NG ,_____
7. Storage Temperature： ☐ Pass ☐ NG ,_____
8. Others：_____

2、Mechanical Specification：

1. PCB Size： ☐ Pass ☐ NG ,_____
2. Frame Size： ☐ Pass ☐ NG ,_____
3. Materal of Frame： ☐ Pass ☐ NG ,_____
4. Connector Position： ☐ Pass ☐ NG ,_____
5. Fix Hole Position： ☐ Pass ☐ NG ,_____
6. Backlight Position： ☐ Pass ☐ NG ,_____
7. Thickness of PCB： ☐ Pass ☐ NG ,_____
8. Height of Frame to PCB： ☐ Pass ☐ NG ,_____
9. Height of Module： ☐ Pass ☐ NG ,_____
10. Others： ☐ Pass ☐ NG ,_____

3、Relative Hole Size：

1. Pitch of Connector： ☐ Pass ☐ NG ,_____
2. Hole size of Connector： ☐ Pass ☐ NG ,_____
3. Mounting Hole size： ☐ Pass ☐ NG ,_____
4. Mounting Hole Type： ☐ Pass ☐ NG ,_____
5. Others： ☐ Pass ☐ NG ,_____

4、Backlight Specification：

1. B/L Type： ☐ Pass ☐ NG ,_____
2. B/L Color： ☐ Pass ☐ NG ,_____
3. B/L Driving Voltage (Reference for LED Type)： ☐ Pass ☐ NG ,_____
4. B/L Driving Current： ☐ Pass ☐ NG ,_____
5. Brightness of B/L： ☐ Pass ☐ NG ,_____
6. B/L Solder Method： ☐ Pass ☐ NG ,_____
7. Others： ☐ Pass ☐ NG ,_____

＞＞ **Go to page 2** ＜＜

winstar

Module Number：_____ **Page: 2**

5、Electronic Characteristics of Module：

1. Input Voltage： ☐ Pass ☐ NG ,_____
2. Supply Current： ☐ Pass ☐ NG ,_____
3. Driving Voltage for LCD： ☐ Pass ☐ NG ,_____
4. Contrast for LCD： ☐ Pass ☐ NG ,_____
5. B/L Driving Method： ☐ Pass ☐ NG ,_____
6. Negative Voltage Output： ☐ Pass ☐ NG ,_____
7. Interface Function： ☐ Pass ☐ NG ,_____
8. LCD Uniformity： ☐ Pass ☐ NG ,_____
9. ESD test： ☐ Pass ☐ NG ,_____
10. Others： ☐ Pass ☐ NG ,_____

6、Summary：

Sales signature：_____

Customer Signature：_____ **Date： / /**