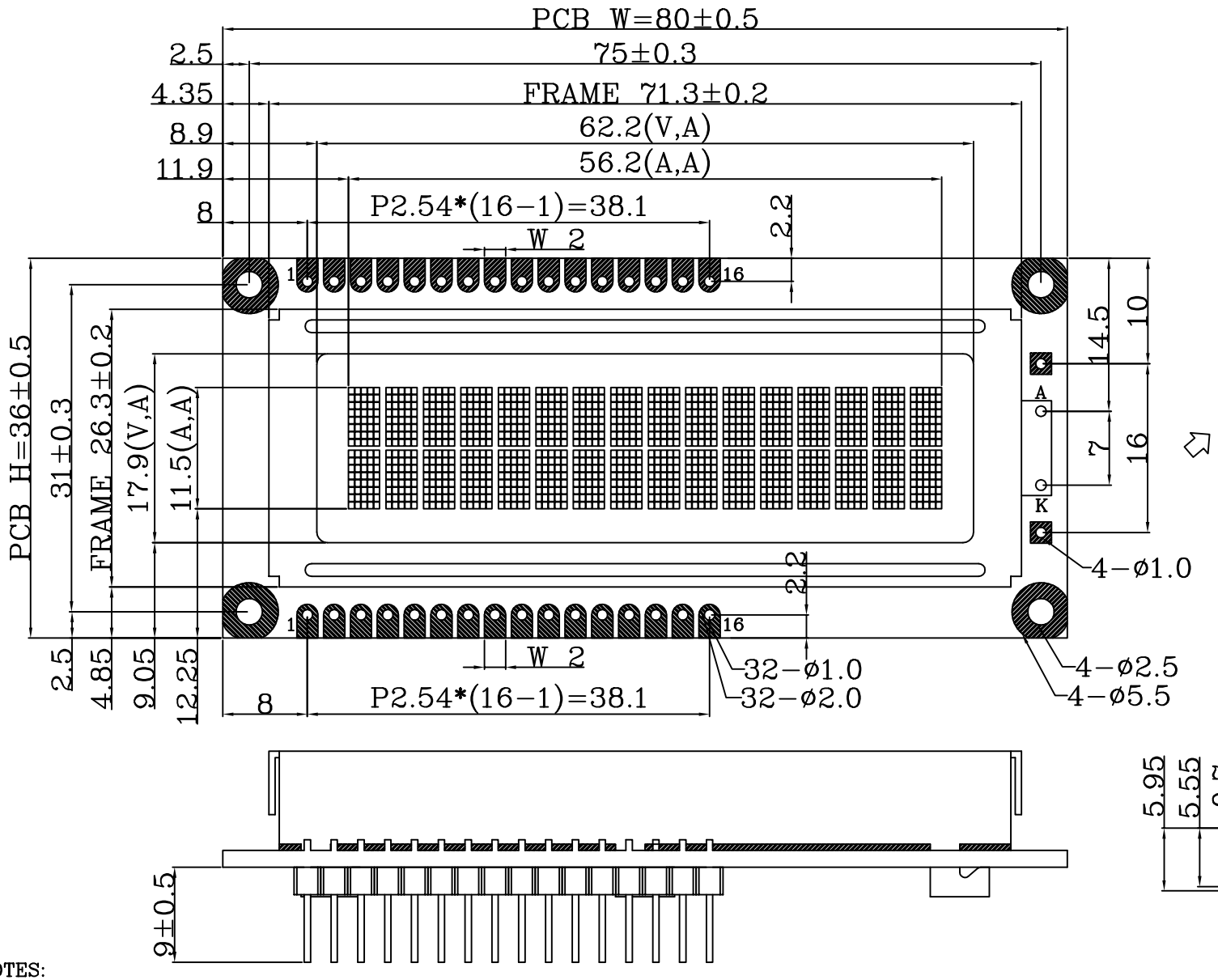

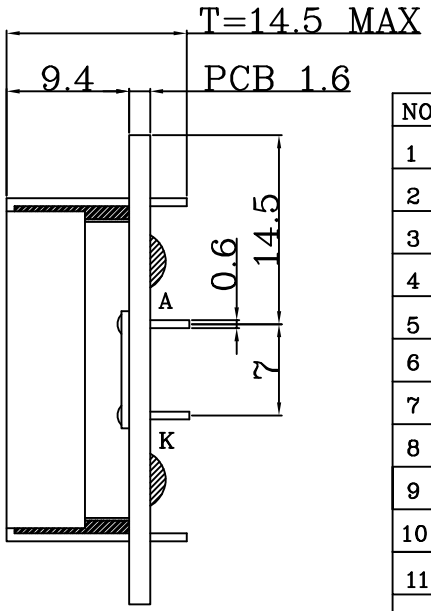

NO	NAME
1	VSS
2	VDD
3	V0
4	RS
5	R/W
6	E
7	DB0
8	DB1
9	DB2
10	DB3
11	DB4
12	DB5
13	DB6
14	DB7
15	LEDA
16	LEDK

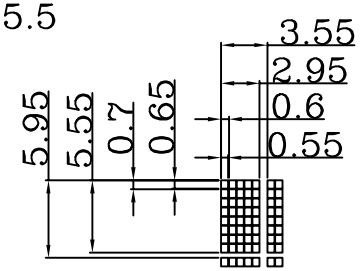

DOTS SIZE

NOTES:

1. DRIVE METHOD: 1/16DUTY, 1/5BIAS,VOP4.5V,VDD5.0V.
2. VIEWING ANGLE: 6 O'CLOCK.
3. DISPLAY TYPE: STN(Y/G), TRANSFLECTIVE/POSITIVE.
4. OPERATING TEMP: 0 TO 50°C.
5. STORAGE TEMP: −20 TO 70°C.
6. CONNECTION: ZEBRA,大片在上.
7. BACK LIGHT:底部(YELLOW GREEN).
8. IC:S6A0069−01,S6A0065.
9. NOT DIMENSION TOLERANCES IS ±0.3.

日期	版本	修改內容	CUSTOMER				DATE	
			DWN	IVY	DATE	2006.10.28	SCALE	TITLE MD DRAWING
			CHKD		DATE		SIZE A4	
			CHKD		DATE		UNIT mm	MODEL GFC016002A012
			APVD		DATE			
			GI FAR TECHNOLOGY CO.,LTD				PAGE	1/1