序号/Item No.	名称/Title	文件编号/File No.

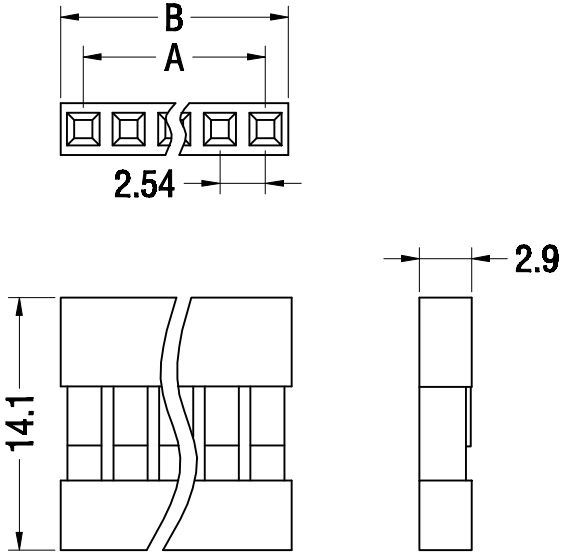

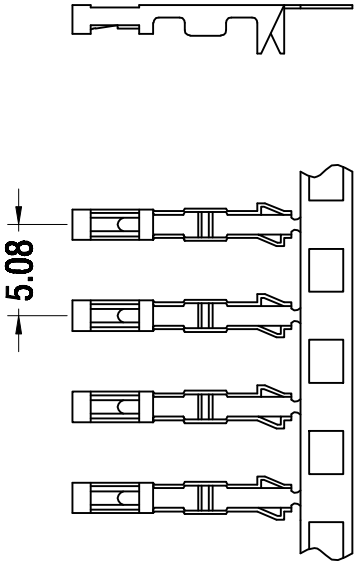

Specifications:
Contact Resistance: 100mΩ max.
Insulator Resistance: 1000MΩ min.at DC 500V
Current Rating: 3AMP

Dielectric Withstanding
Voltage: AC 500V For 1 minute
Operating Temperature:-25°C--+85°C
Contact: Phosphor Bronze
Housing: Nylon UL 94V-0

Position	2 Thru 32
A	2.54*Position NO.-2.54
B	2.54*Position NO.

设计/Designed by	绘图/Drawing by	审核/Checked by	批准/Approved by	未注公差 General Tolerance
				X ±0.2 X° ±2°
新莱亚电子 XINLAIYA ELECTRONIC CO.,LTD		图名/Title 130(单排)-A	文件编号/File No.	X ±0.1 X° ±1°
			页序/Sheet	.XX ±0.05 .XX° ±0.5°
		备注/Remark		.XXX ±0.01
				单位/Units: mm

序号/Item No.	更改记录/Revision note	签名/Signature	日期/Date