THIS DRAWING IS UNPUBLISHED. RELEASED FOR PUBLICATION –,– .
© COPYRIGHT – BY TYCO ELECTRONICS CORPORATION. ALL INTERNATIONAL RIGHTS RESERVED.

LOC	DIST
BD	35

REVISIONS

P	LTR	DESCRIPTION	DATE	DWN	APVD
	A2	REVISED PER ECO–10–012277	14JUN10	HMR	MG

△1 FINISH: ZINC PLATE WITH CLEAR CHROMATE

△2 FINISH: ZINC PLATE WITH NON–HEXAVALENT CHROMATE

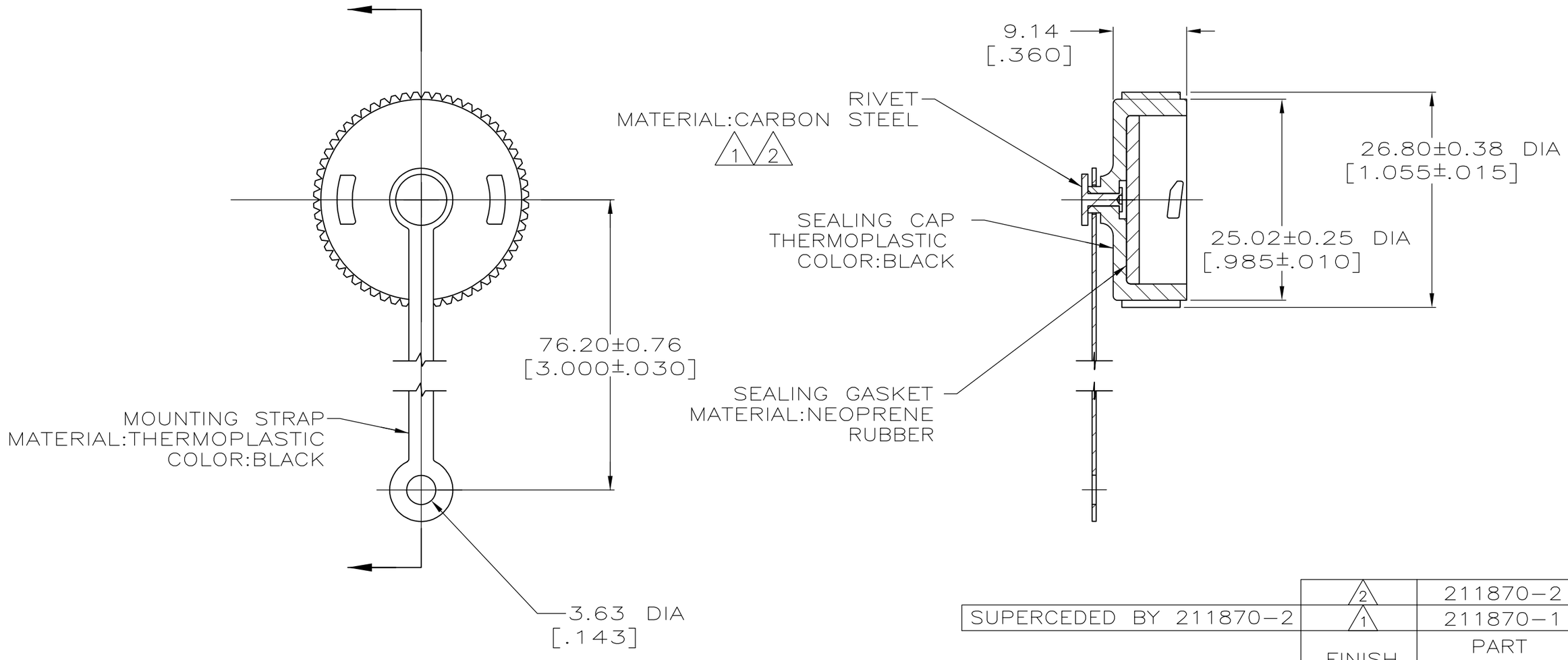

	△2	211870–2
SUPERCEDED BY 211870–2	△1	211870–1
	FINISH	PART NUMBER

THIS DRAWING IS A CONTROLLED DOCUMENT.

DIMENSIONS: mm [INCHES]

TOLERANCES UNLESS OTHERWISE SPECIFIED:

0 PLC	± –
1 PLC	± –
2 PLC	± 0.13[.005]
3 PLC	± –
4 PLC	± –
ANGLES	± –

MATERIAL: SEE CALLOUTS

FINISH: SEE CALLOUTS

DWN	D.BROCKWAY	6–9–93
CHK	R.STONE	7–1–93
APVD	AL FRANTUM	7–1–93
PRODUCT SPEC	—	
APPLICATION SPEC	—	
WEIGHT	—	

CUSTOMER DRAWING

Tyco Electronics

Tyco Electronics Corporation
Harrisburg, PA 17105–3608

NAME: SEALING CAP ASSY, SIZE 13, CPC

SIZE	CAGE CODE	DRAWING NO	RESTRICTED TO
A3	00779	C–211870	—

SCALE	SHEET	REV
2:1	1 OF 1	A2

1470–19 (1/08)