図面番号(DRAWING NO.) SJ105219

版数 VER.	年月日 DATE	CN NO.	変更内容 DESCRIPTION	製図 DR.	担当 CHK.	査閲 APPD.	承認 APPD.
2	23.Jan.2006	059045	CHANGED BOSS LENGTH	———	Y.YAHIRO	———	K.HISATOMI
3	30.Mar.2015	012843	CORRECT AN ERROR	———	S.YAMAGUCHI	M.SASAKI	T.SHINDOU
4	21.Feb.2019	028429	CORRECTED FIGURES	M.SAITOU	Y.SATOU	———	T.MASUMOTO

WISDOM承認 2019/03/04

DESIGNATION

MM60-52B1-E*

- SERIES PREFIX
- No. OF CONTACTS
- SOCKET TYPE
- KEYING TYPE
- MODIFY CODE E:5.9mm HIGHT WITH BOSS
- CONTACT FINISH 1:Au(0.1μm Min.) OVER Ni 2:Au(0.3μm Min.) OVER Ni

NOTE 1. PRODUCTION LOT No. AS INDICATED.

(Ex.) T501

- LOT NUMBER OF CURRENT MONTH
- MONTH (1 TO 9 FOR JAN. TO SEPT. RESPECTIVELY. OCT.:O. NOV.:X. DEC.:Y)
- YEAR (LAST DIGIT ONLY)
- MANUFACTURE CODE

NOTE 2. CARD THICKNESS APPLIES ACROSS TABS AND INCLUDES PLATING AND/OR METALIZATION.

NOTE 3. BEVEL MUST BE FREE OF CUTTING BURRS.

NOTE 4. THE HORIZONTAL AXIS FOR THE PATTERN IS ESTABLISHED BY A LINE THROUGH THE CENTER OF THE φ1.6 AND φ1.1 HOLES.
THE VERTICAL AXIS IS 90° TO THE HORIZONTAL AXIS. THROUGH THE CENTER OF DATUM F.

NOTE 5. LOCATION OF INSERTED CARD EDGE IS ALIGNED WITH ℄ OF HOLES.

NOTE 6. ONLY WHEN THE LATCH SHOWN IN SJ105221(MM60-EZH059-B5) IS USED. THESE DIMENSIONS ARE APPLIED.

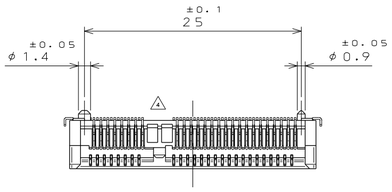

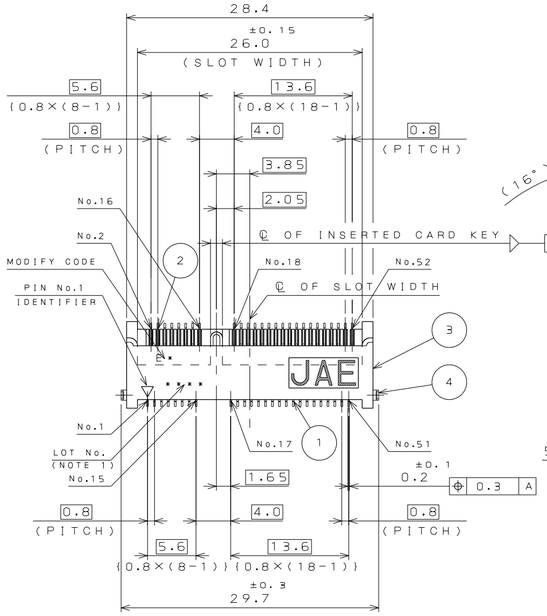

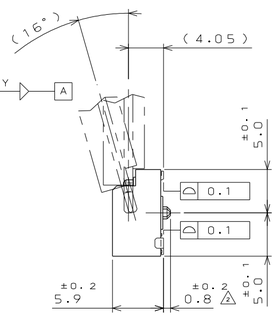

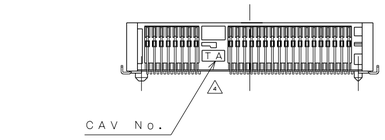

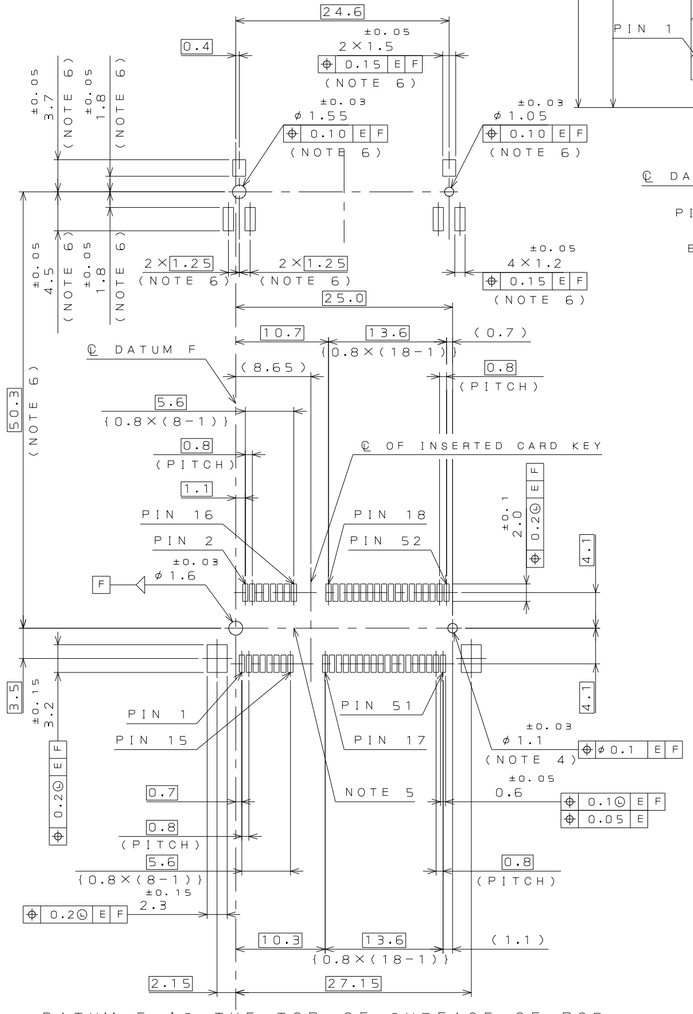

DATUM E IS THE TOP OF SURFACE OF PCB.

APPLICABLE P.C.B. DIMENSION(REF.)

適合基板寸法(参考)

HATCHED AREAS ILLUSTRATE MAXMUM AVAILABLE COMPONENT VOLUME.

APPLICABLE DIMM(REF.)

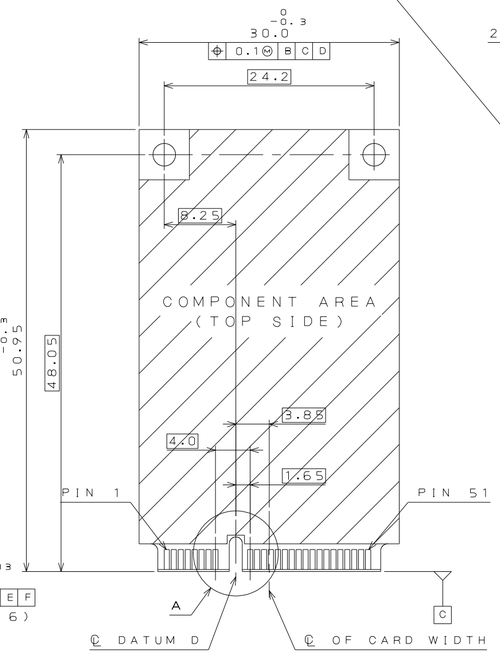

PIN NUMBERING REFERENCE :
ODD PINS − TOP SIDE
EVEN PINS − BOTTOM SIDE

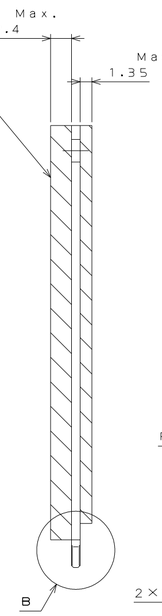

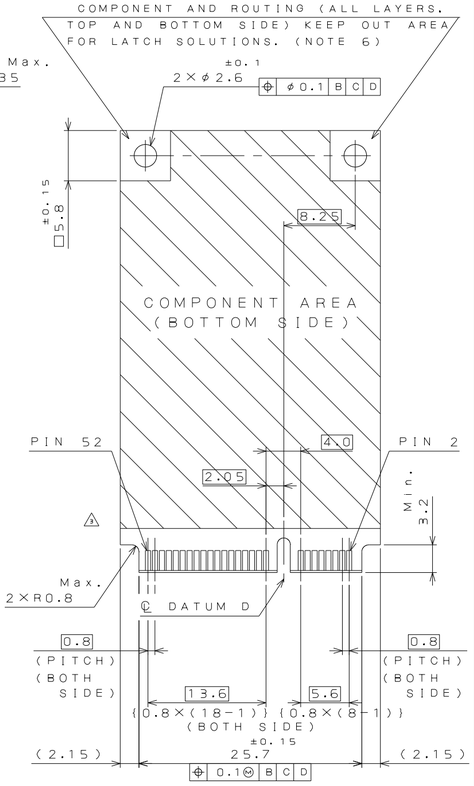

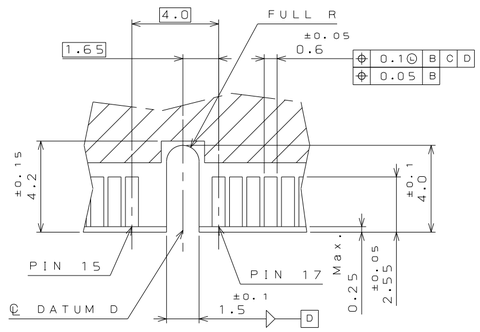

DETAIL A
(SCALE 5:1)

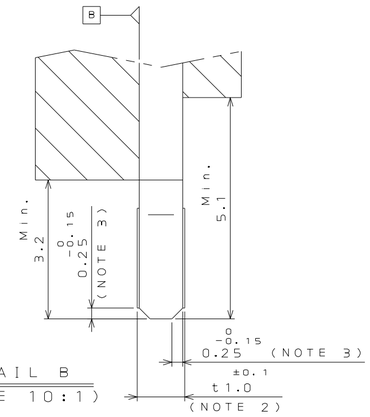

DETAIL B
(SCALE 10:1)

符号 NO.	名称 DESCRIPTION	個数 QTY.	材料 MATERIAL	仕上 FINISH	備考 REMARKS
4	HOLD DOWN	2	COPPER ALLOY	TIN PLATING	———
3	INSULATOR	1	THERMOPLASTIC	———	UL94 V−0
2	BOTTOM SIDE CONTACT	26	COPPER ALLOY	CONTACT AREA : Au OVER Ni SOLDERING AREA : GOLD FLASH OVER Ni	———
1	TOP SIDE CONTACT	26	COPPER ALLOY	CONTACT AREA : Au OVER Ni SOLDERING AREA : GOLD FLASH OVER Ni	———

仕様書(SPECIFICATION) JACS-10313	第1版(ORIGINAL DATE) 5.Dec.2005	尺度(SCALE) 2:1	シリーズ(SERIES) MM60
一般公差(GENERAL TOLERANCE) 寸法(DIMENSION) . ±0.8 .X ±0.4 .XX ±0.1 .XXX± 角度(ANGLES) X° ± X°X' ±	製図 DR. ———	名称(TITLE) MM60-52B*-E*	日本航空電子工業株式会社 JAPAN AVIATION ELECTRONICS INDUSTRY, LTD.
	担当 CHK. Y.YAHIRO		
	査閲 APPD. ———		
	承認 APPD. K.HISATOMI	質量(MASS)	図面番号(DRAWING NO.) SJ105219
	単位(UNIT):mm		版数(VER.) 4

SIZE A2

JAE-CONNECTOR.COM
Reference Only

JAE CONNECTOR DIV. PROPRIETARY.
COPYRIGHT(C) 2005. JAPAN AVIATION ELECTRONICS INDUSTRY, LTD.

DCF-C-213H(12.08)